Raychem JBS-100

SINGLE-ENTRY POWER CONNECTION WITH JUNCTION BOX

10 YEAR Product warranty

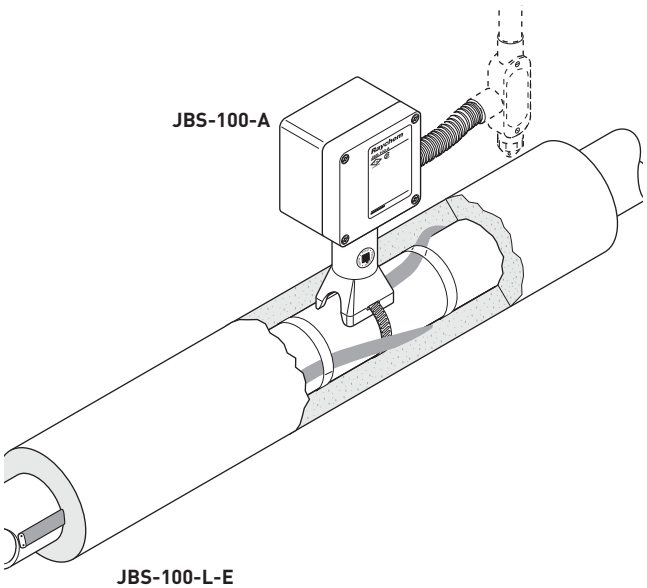

JBS-100-L-E
(Shown with light)

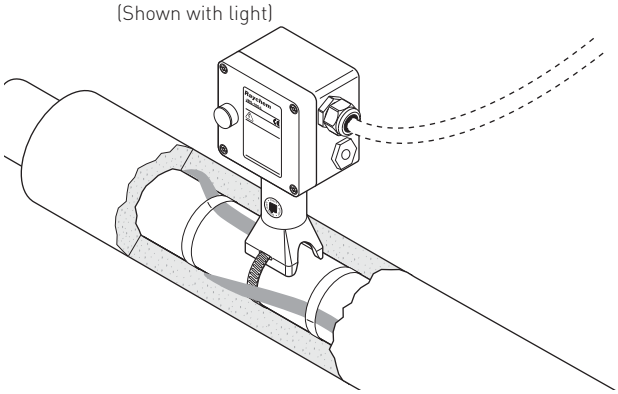

PRODUCT OVERVIEW

The JBS-100 kit is designed to connect power to a single Raychem brand BTV, QTVR, XTV, KTV, or VPL heating cable. It is approved by FM, CSA, PTB and IEx for use in hazardous locations.

The JBS-100 integrates the functions of connection kits and insulation entries. The rugged stand protects the heating cable and allows for up to four inches (100 mm) of thermal insulation.

The cold-applied core sealer does not require a heat gun or torch for installation, so no hot work permit is necessary. The silicone-free, noncuring sealant allows easy installation and re-entry for maintenance.

Innovative spring clamp terminals provide fast installation and safe, reliable, maintenance-free operation.

Compared with other systems, this connection kit significantly reduces installation time. The kit is offered in three versions, customized for local installation practices, and is also available with a plug-in LED light (-L) that indicates when power is supplied to the heating cable circuit.

The kit contains all the necessary materials for a complete installation except for one pipe strap, which must be ordered separately.

	JBS-100-A, A6 **JBS-100-L-A***	**JBS-100-E** **JBS-100-L-E***	**JBS-100-EP** **JBS-100-L-EP***
	*Not for use with 480 V VPL		
DESCRIPTION			
	This kit has a junction box with one through hole.	This kit has a junction box with two M25 threaded entries, one stopping plug and one plastic power cable gland.	This kit has a junction box with two M25 threaded entries, an earthing plate and an external earthing stud. It is designed for use with armored power cables.

	JBS-100-A, A6 JBS-100-L-A*	JBS-100-E JBS-100-L-E*	JBS-100-EP JBS-100-L-EP*
	*Not for use with 480 V VPL		

KIT CONTENTS

Note: Order appropriate pipe strap separately (one per kit)	1 junction box with terminals 1 stand assembly 1 core sealer 1 green/yellow tube 1 light module (for -L only) 1 cable tie	1 junction box with terminals 1 stand assembly 1 core sealer 1 green/yellow tube 1 M25 gland for power cable 8–17 mm in diameter 1 M25 stopping plug 1 light module (for -L only) 1 cable tie	1 junction box with terminals, earth continuity plate, and stud 1 stand assembly 1 core sealer 1 green/yellow tube 1 M25 stopping plug 1 light module (for -L only) 1 cable tie

APPROVALS

Hazardous Locations

FM APPROVED
Class I, Div. 2, Groups A, B, C, D[2]
Class II, Div. 2, Groups E, F, G[2]
Class III[2]
-WS

II 2G II 2D
Ex e II
Ex tD A21 IP66
PTB 09 ATEX 1059U
IECEx PTB 09.0037U

II 2G Ex emb II
II 2D Ex tD mbD A21 IP66
PTB 09 ATEX 1059U
IECEx PTB 09.0037U

FM APPROVED [1]
CLI, ZN1, AEx e II T[2]
CLI, ZN1, AEx em II T[2] (for -L only)

-WS
Ex e II T[2]

-WS
Ex em II T[2]

-WS
Ex e II T[2]
Ex em II T[2] (for -L only)

09-IEx-0004X
Ex e IIC T* Gb
Ex em IIC T* Gb

09-IEx-0004X
Ex em IIC T* Gb
Ex e IIC T* Gb

09-IEx-0004X
Ex e IIC T* Gb
Ex em IIC T* Gb

IECEx JBS-100-A is IECEx certified for use with:

BTV-CR/BTV-CT:	IECEx BAS 06.0043X
QTVR-CT:	IECEx BAS 06.0045X
XTV-CT:	IECEx BAS 06.0044X
KTV-CT:	IECEx BAS 06.0046X
VPL-CT:	IECEx BAS 06.0048X

[1]Except VPL
[2]For T-rating, see heating cable or design documentation

DIMENSIONS

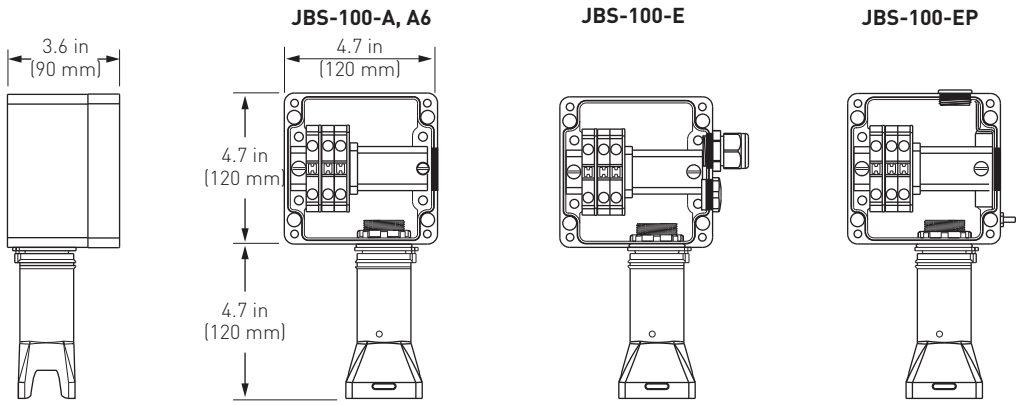

	JBS-100-A, A6	JBS-100-E	JBS-100-EP
PRODUCT SPECIFICATIONS			
Heating cable capability	BTV-CR, BTV-CT, QTVR-CT, XTV-CT, KTV-CT and VPL-CT		
Ingress protection	NEMA 4X	IP66/IP67	IP66/IP67
Entries	1 x 3/4 in	2 x M25	2 x M25
Minimum installation temperature	–40°F (–40°C)	–40°F (–40°C)	–40°F (–40°C)
Minimum ambient temperature	–75°F (–60°C)*	–60°F (–50°C)*	–60°F (–50°C)*
Maximum ambient temperature	132°F (56°C)*	132°F (56°C)*	132°F (56°C)*
	* For –L lighted kits, the ambient temperature range is –40°F (–40°C) to 104°F (40°C). For non-lighted kits, use a power wire with continuous temperature rating of > 194°F (90°C). For –E and –EP kits use a metallic power cable gland.		
Maximum pipe temperature	500°F (260°C)	500°F (260°C)	500°F (260°C)
Terminals	Spring clamp Ex e 2 line, 1 ground	Spring clamp Ex e 1 phase, 1 neutral, 1 earth	Spring clamp Ex e 1 phase, 1 neutral, 1 earth
Maximum conductor size	8 AWG (A6 to 6 AWG)	10 mm^2	10 mm^2
Maximum operating voltage	480 Vac	480 Vac	480 Vac
Maximum circuit breaker rating	50 A	40 A	40 A
MATERIALS			
Enclosure	Electrostatic charge-resistant glass-filled engineered polymer, black	Electrostatic charge-resistant glass-filled engineered polymer, black	Electrostatic charge-resistant glass-filled engineered polymer, black
Lid screws	Stainless steel	Stainless steel	Stainless steel
Lid gasket	Silicone rubber	Silicone rubber	Silicone rubber
Earth continuity plate	n/a	n/a	Steel, zinc-plated and yellow-chromated
OPTIONAL LED INDICATOR LIGHT			
Color	Red	Green	Green
Voltage rating	100–277 Vac	100–277 Vac	100–277 Vac
Power consumption	< 1 W	< 1 W	< 1 W
ORDERING DETAILS			
Power connection			
Catalog number	JBS-100-A / JBS-100-A6	JBS-100-E	JBS-100-EP
Part number	085947-000 / C26470-000	829939-000	158251-000
Weight	2.5 lb (1.1 kg)	1.2 kg (2.6 lb)	1.3 kg (2.9 lb)
Power connection with light			
Catalog number	JBS-100-L-A	JBS-100-L-E	JBS-100-L-EP
Part number	944699-000	054363-000	075249-000
Weight	3.5 lb (1.6 kg)	1.6 kg (3.5 lb)	1.7 kg (3.7 lb)

WWW.PENTAIRTHERMAL.COM

NORTH AMERICA
Tel: +1.800.545.6258
Fax: +1.800.527.5703
Tel: +1.650.216.1526
Fax: +1.650.474.7711
thermal.info@pentair.com

EUROPE, MIDDLE EAST, AFRICA
Tel: +32.16.213.511
Fax: +32.16.213.603
thermal.info@pentair.com

ASIA PACIFIC
Tel: +86.21.2412.1688
Fax: +86.21.5426.2917
cn.thermal.info@pentair.com

LATIN AMERICA
Tel: +1.713.868.4800
Fax: +1.713.868.2333
thermal.info@pentair.com

Pentair, JBS, BTV, QTVR, XTV, KTV, and VPL are owned by Pentair or its global affiliates. All other trademarks are the property of their respective owners. Pentair reserves the right to change specifications without prior notice..

© 2000–2013 Pentair.